Instruction Book

Snowblowers

Single Auger
('S' Models)
Double Auger
('D' Models)

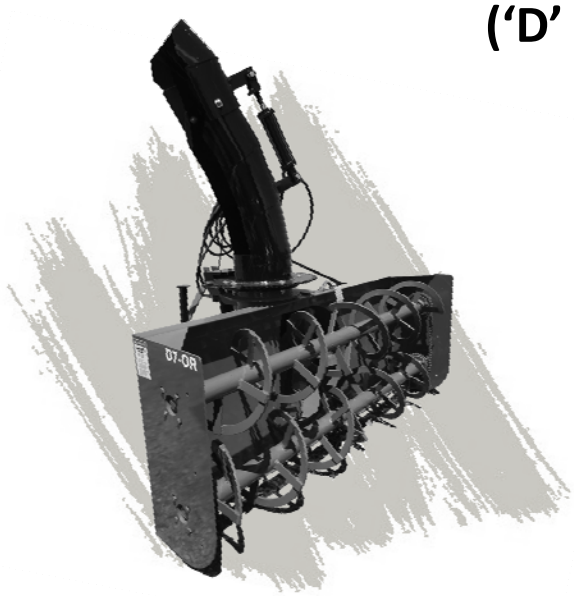

Manufactured By:
Helm Welding (1983) Limited
86386 Lucknow Line
PO Box 158
Lucknow, Ontario, Canada
N0G 2H0
TEL: (519) 529-7627 or 529-7000
FAX: (519) 529-3260
Email: inquiry@lucknowproducts.com
Website: www.lucknowproducts.com

Documentation © 2017 by Helm Welding (1983) Limited. All rights reserved.

No parts of this manual may be reproduced or transmitted in any form of by any means, electronic or mechanical, including photocopying and recording, or by any information storage retrieval system, without permission in writing from Helm Welding (1983) Limited

Helm Welding (1983) Limited
86386 Lucknow Line
PO Box 158
Lucknow, Ontario, Canada
N0G 2H0
Email: inquiry@lucknowproducts.com
Website: www.lucknowproducts.com

Printed in Canada 2017

This Copy Must
Be Returned To
HELM WELDING (1983) LIMITED

Helm Welding (1983) Limited
P.O. Box 158
Lucknow, Ontario, Canada
N0G 2H0

END - USER CERTIFICATE FOR AGRICULTURAL USE

Pre-Delivery Check List & Warranty Registration

- ☐ 1. Inspect machine for loosened bolts during transit.
- ☐ 2. Inspect machine for loose bearing locking collars.
- ☐ 3. Check all roller chains for alignment.
- ☐ 4. Check oil level in gearbox.
- ☐ 5. Ensure that PTO drive is fitted properly (check proper lengths).
- ☐ 6. Grease all bearings where applicable, PTO components and chains.
- ☐ 7. Run Machine and make sure all functions work properly before delivery to user.
- ☐ 8. Check to ensure all safety equipment is in place.

For Farm Purposes Only (As it relates to the crops grown)

"In consideration of your selling to me the within described equipment at a lower price of my foregoing certification, I agree to pay on demand any claim made by the Federal Government for Sales Tax and/or Duty in respect to this transaction."

Dealer Signature:_____Date:_____

Client Signature:_____Date:_____

Client Address: _____

_____

_____

_____

Serial #_____Model #_____

DEALERS CERTIFICATE:
I/we hereby certify that to the best of my/our knowledge, the above certificate is correct.

_____ (Dealer's Name)

_____ (Dealer's Signature)

Purchaser Retains
This Copy

Helm Welding (1983) Limited
P.O. Box 158
Lucknow, Ontario, Canada
N0G 2H0

END - USER CERTIFICATE FOR AGRICULTURAL USE

Pre-Delivery Check List & Warranty Registration

- ☐ 1. Inspect machine for loosened bolts during transit.
- ☐ 2. Inspect machine for loose bearing locking collars.
- ☐ 3. Check all roller chains for alignment.
- ☐ 4. Check oil level in gearbox.
- ☐ 5. Ensure that PTO drive is fitted properly (check proper lengths).
- ☐ 6. Grease all bearings where applicable, PTO components and chains.
- ☐ 7. Run Machine and make sure all functions work properly before delivery to user.
- ☐ 8. Check to ensure all safety equipment is in place.

For Farm Purposes Only (As it relates to the crops grown)

"In consideration of your selling to me the within described equipment at a lower price of my foregoing certification, I agree to pay on demand any claim made by the Federal Government for Sales Tax and/or Duty in respect to this transaction."

Dealer Signature:_____Date:_____

Client Signature:_____Date:_____

Client Address: _____

_____

_____

_____

Serial #_____Model #_____

DEALERS CERTIFICATE:
I/we hereby certify that to the best of my/our knowledge, the above certificate is correct.

_____ (Dealer's Name)

_____ (Dealer's Signature)

Warranty Information

Helm Welding (1983) Limited warrants to the original user that goods & equipment of its manufacture are free from defects in material and workmanship under normal use and service for a period of one year from the date of shipment, or where applicable from the date of installation by the dealer.

Helm Welding (1983) Limited will, at its option, repair or replace parts (F.O.B. point of shipment) that are found to be defective.

This warranty is on these further terms and conditions:

1. The equipment must be installed (when applicable), operated and maintained in accordance with Helm Welding's instructions.
2. Any Luck//Now Snowblower that is sold for commercial use (e.g. custom snowblowing) is excluded from the normal one year warranty and would be warranted for 90 days only.
3. Excluded from the warranty are damages caused by late delivery, ordinary wear and tear, erosion or corrosion, lightning and other acts of God, accident or alteration, repair or attempted repair or adjustments made by persons not authorized by Helm Welding (1983) Limited, by misuse, abuse or improper handling or operation of the equipment by the purchaser or any third party or poor or no servicing of machine.
4. Helm Welding (1983) Limited shall in no event be responsible for any consequential damages of any nature whether special or general, direct or indirect.
5. Equipment, parts or accessories manufactured by others and not sold under Helm Welding (1983) Limited trademark(s) carry the warranty and remedy provided by their manufacturer only.
6. Any warranty or claim, which differs from that herein set out is unauthorized by Helm Welding (1983) Limited and is the warranty solely of the party making it. Helm Welding (1983) Limited makes no other warranty express or implied and the original user's sole remedy for breach thereof is as set forth above.

To properly qualify for warranty, all maintenance criteria and service schedules must be followed. As well, the pre-delivery check list and warranty registration forms must also have been completed at the time of product delivery and returned to us the manufacturer for proper record keeping.

In extreme warranty situations, the service record must be provided to Helm Welding upon request at any time.

Failure to follow and provide any of the above information will void warranty.

The warranty registration card must be completed and mailed within thirty (30) days of delivery or installation of the equipment to validate this warranty.

Note: Credits or replacements will not be issued unless documentation is complete and correct.

Date of installation _____ Serial Number _____

Your Luck//Now Dealer _____

Name _____

Address _____

Telephone Number _____

HELM WELDING (1983) LIMITED
86386 Lucknow Line
PO Box 158
Lucknow, Ontario, Canada
N0G 2H0

Tel: (519) 529-7627 or (519) 529-7000
Fax: (519) 529-3260

ATTENTION:
Technical Customer Service

Number of pages
including front-page _____

Reader's comments

Helm Welding (1983) Limited is committed to providing excellent documentation. Please, fax or write us your comments on this manual.

Your suggestions help us improve our technical information.

General

Please check appropriate square.

Agree	Disagree	
☐	☐	* I can find the information I want
☐	☐	* The table of contents is thorough
☐	☐	* Instructions are complete
☐	☐	* There are enough illustrations
☐	☐	* Illustrations are clear and helpful

Comments:

_____

_____

_____

_____

Name & Address

_____

_____

Important Information

This manual has been prepared to provide the owner and operator with the information required to properly operate and maintain this unit. It is important that you, the owner or operator, read this manual prior to operating or performing any maintenance work on the unit.

Date of purchase: _____

Serial Number: _____

Information needed for ordering parts;

Model Number: _____

Special Options: _____

_____

_____

Table of Contents

1. Safety 1
2. Start-Up 3
   Manual Rotator Assembly (‘C’ Models) 3
   Hydraulic Rotator Assembly (‘H’ Models) 4
   Orbital Rotator Assembly (‘-OR’ Models) 5
   Tractor Requirements 6
   PTO Shaft & Gearbox Operation 7
3. Maintenance 10
   Installing New Chain 10
   Sprocket Inspection 10
   Bearings – Grease (where applicable) 10
   Gearbox 10
   PTO Drive Shaft 11
4. Maintenance & Lubrication Schedule 13
   Lubrication Specifications 13

1. Safety

Before operating Luck//Now Snowblowers, carefully read the instructions provided in the following chapters. Proper handling of the equipment is the basis of trouble-free functioning.

SAFETY SUGGESTIONS:

- Make sure that anyone operating the snowblower has received proper training.
- Make sure that everyone is clear of machine before starting as well as during operation.
- Completely shut down snowblower and tractor before greasing, adjusting, or unclogging the blower.
- Keep hands, feet, and clothing away from moving parts.
- Make sure that your tractor has adequate ballast for stability as prescribed in your tractor operator's manual.

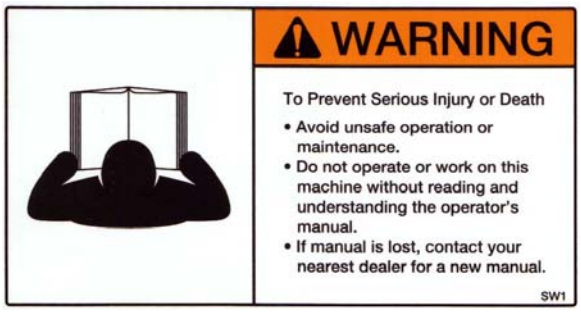

SW1: Proper handling of the equipment is the basis of trouble - free functioning. The equipment **MUST** be used only for the intended application.

SW104: Observe the correct PTO speed. **DO NOT** exceed the correct PTO speed. PTO speed is 540 rpm on all models

---

Safety

SW108: Keep guard doors over chain drives closed when in operation. **STOP** unit to lubricate.

SW103: Augers are very aggressive. **NEVER** operate when there is anything in front of the auger intake. Completely shut down the power unit and set the brake before proceeding in front of the auger intake.

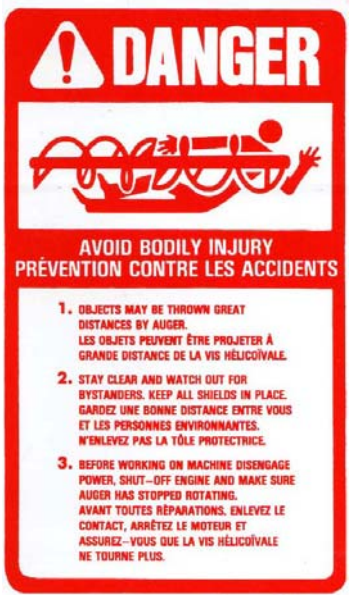

SW806: Snowblower Augers are very aggressive - **NEVER** leave the tractor with the PTO engaged to unclog, or to kick material into the auger(s).

---

2. Start-Up

Manual Rotator Assembly ('C' Models)

Before installing the cable, position the hood as shown in the figure below.

1. Slide the crank handle into the tube assembly. Turn the handle until the bent portion is lowest to the ground. Rotate the tube assembly until the weld nut #1 is pointing towards the hood (3 o'clock position). Tighten the bolt on the tube assembly that tightens onto the crank handle.
2. Insert the cable through the weld nut #1, then through a cable crimp. Loop the cable back through the crimp and tighten the crimp (as shown in Fig. 1-1).
3. Keeping the cable tight, wrap the cable around the hood in a clockwise direction. Pull the cable through the nut welded to the hood (as shown in Fig. 1-2). Insert the cable through the nut again and tie a half knot in the cable around the nut (as shown in Fig. 1-2).
4. Continue to wrap the cable around the hood in a clockwise direction (keep the cable tight). Pull the cable towards the weld nut #2. As you hold the cable tightly with one hand, use the other hand to rotate the crank handle in a counter clockwise rotation. The hood should be rotating towards the rear of the machine, and the cable wrapping around the tube assembly at position #1. Rotate the hood 180 degrees (pointing exactly opposite to the original position). The weld nut #2 should be pointing towards the hood (3 o'clock position).
5. Insert the cable through weld nut #2 (as shown in Fig. 1-3). Slide a cable crimp over the cable, loop the cable back through the crimp and tighten the crimp.

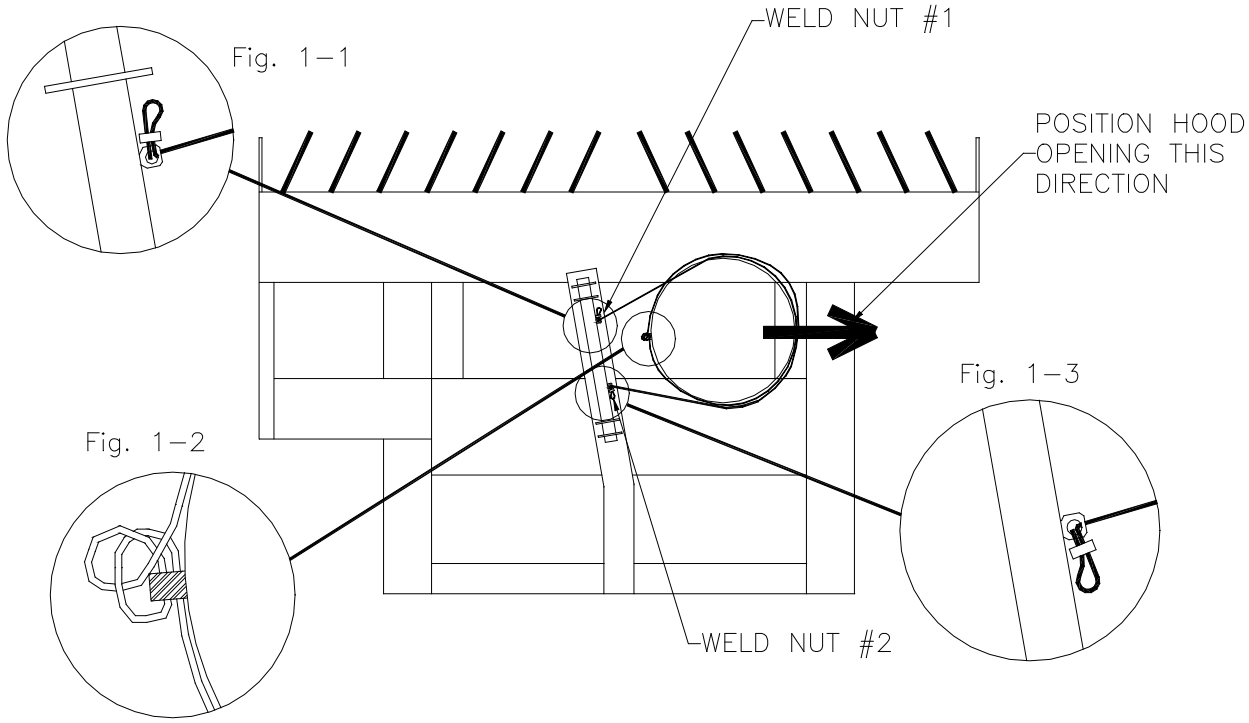

Hydraulic Rotator Assembly ('H' Models)

Before installing the cable, position the hydraulic rotator assembly and hood as shown in the figure below.

1. Slide a ¼" cable clamp over the end of the cable and insert the cable through the hole in the rotator assembly (as shown in the figure below at the start location). Thread the end of the cable back through the cable clamp and tighten the cable clamp securely (as shown in Fig. 1-1).

2. Run the cable along the rotator and around the back side of the hood. Insert a cable clamp through the u-bolt welded to the hood. Run the cable through this cable clamp. Pull the cable tight and securely tighten the cable clamp (as shown in Fig. 1-2).

3. Run the cable around the front of the hood and along the rotator. Slide a cable clamp over the end of the cable and insert the cable through the hole in the rotator. Thread the end of the cable back through the cable clamp and tighten the cable clamp securely (as shown in Fig. 1-1).

4. Cut off any excess cable if necessary.

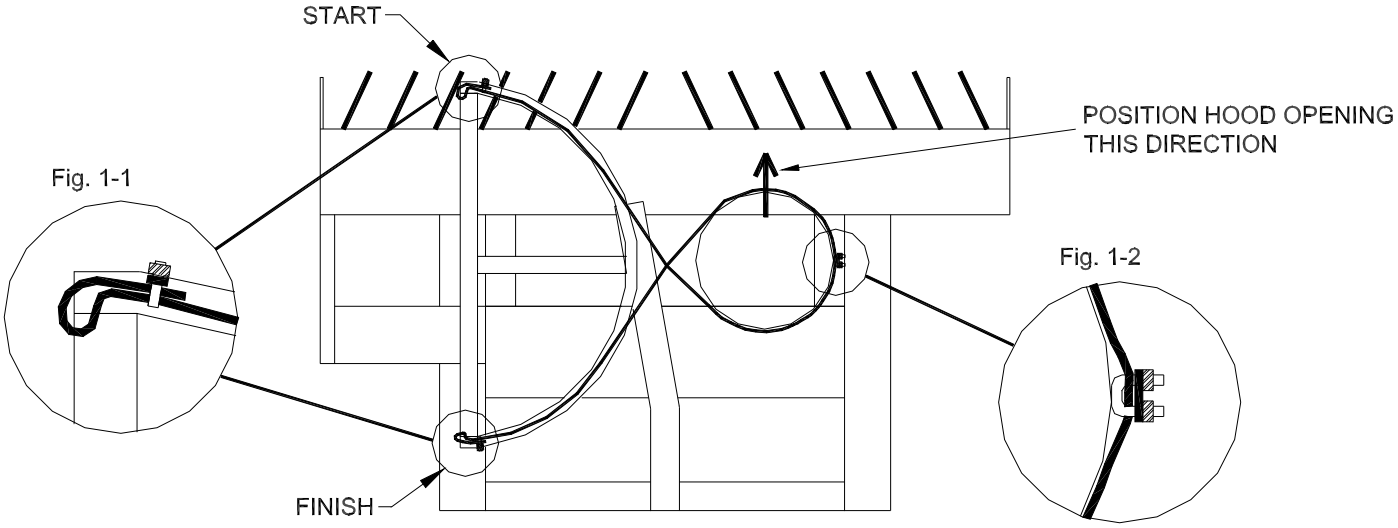

Orbital Rotator Assembly ('-OR' Models)

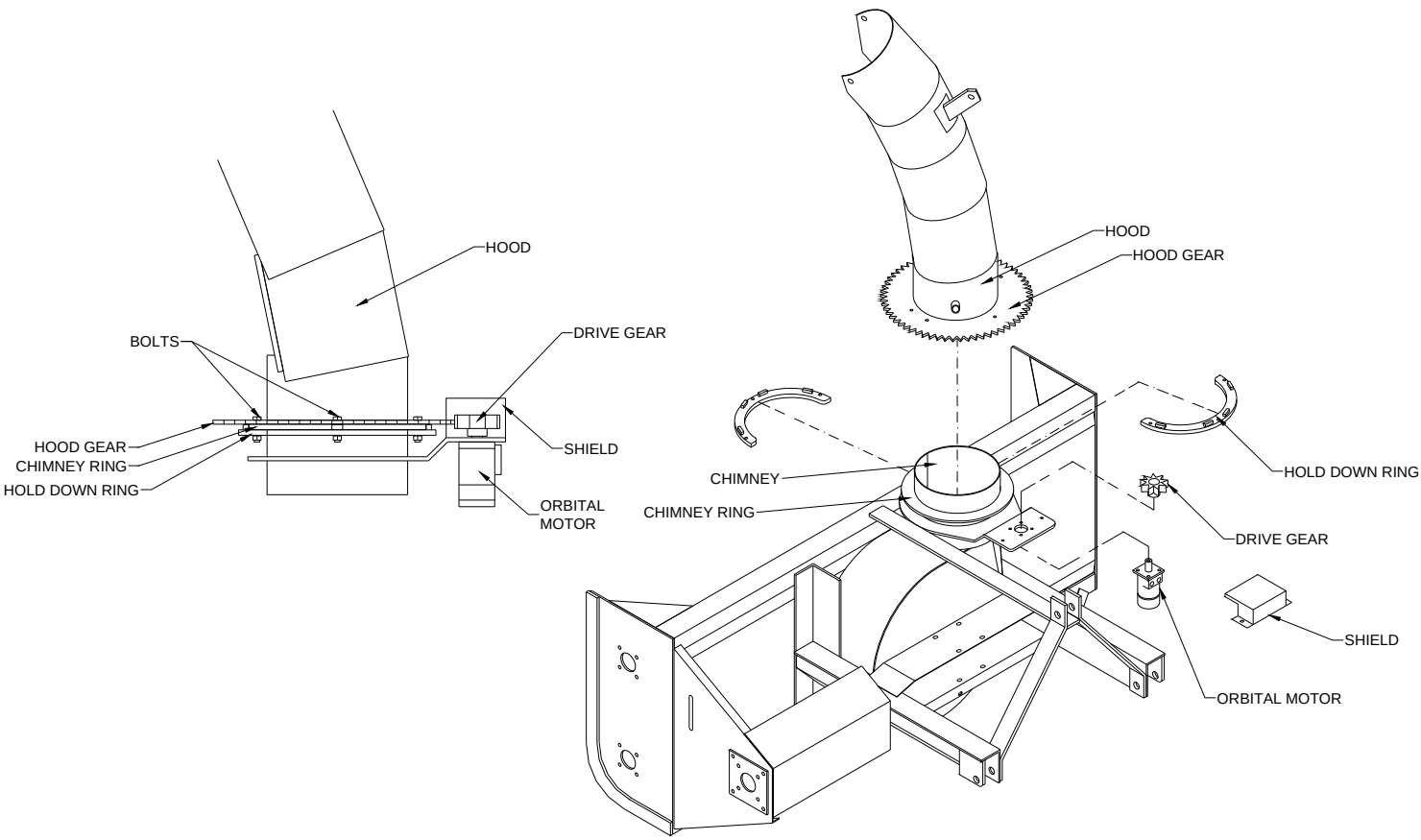

Before installing the hood, make sure the chimney has been greased on the outside surface where the hood will sit (a lithium based grease is recommended).

1. Set the hood onto the chimney (it will sit on the chimney ring), make sure it turns freely. Turn the hood so the opening in the hood is on the auger side of the blower.
2. Locate the hold down rings as shown above. Place them under the chimney ring with the square spacers pointing up. Align the bolt holes on the hold down rings with the holes on the hood gear.
3. Using the bolts provided, bolt the hold down rings to the hood gear. The bolts should be tight enough to hold the hood in place, but still allow it to turn freely.
4. Install the orbital motor on the motor plate (if not already installed), install the drive gear onto the motor shaft. Install the bolt through the drive gear into the end of the motor shaft.
5. Install the shield over top of the drive gear and bolt in place.

Tractor Requirements

Use only an adequately sized tractor that can handle the PTO, hydraulic requirements and maneuverability of the unit. The PTO speed requirements of the units are 540 rpm (1000 rpm for D9 & D10 only). The PTO horsepower required to operate the units will vary according to the volume of the load, and will be determined by actual use. Recommended horsepower is shown in the chart below.

	Recommended Horsepower	
Model	**Minimum**	**Maximum**
S5	20	35
S6	20	35
S65	35	70
S7	40	70
S75	50	90
S100	80	105
S9	80	105
D7	70	90
D75	80	105
D8	90	115
D85	100	150
D9	120	160
D10	140	180

1. Adjust the top linkage so that the machine is set flat to the ground level. Too long of a linkage will make the snowblower very aggressive and will dig into the roadway whereas a shortened linkage will allow the snowblower to ride up and not be aggressive enough.

2. Adjust the lifting arms to ensure that the snowblower is set level from side to side.

3. Adjust stabilizer bars, chains, or blocks to the proper settings to keep excess side movement to a minimum.

Installation Instructions for Better PTO Shaft & Gearbox Operation

A proper initial installation will give you years of satisfactory service on your equipment. Please read the following instructions carefully, which have been specially made to help you maintain satisfaction with your purchase.

WARNING: Unfortunately, the snowblower will be faced with forgotten or hidden objects under the snow, such as: chain, tires, stones, pieces of wood, etc… In spite of our snowblower strength and durability, they are not built to handle all of these conditions.

Danger: Tractor Too Large

It is dangerous to use a tractor, which is too big or too powerful. The tractor may be able to overload the blower, even if the machine is already at maximum capacity. If the tractor PTO shaft is too high above the ground, extreme angles at PTO shaft universal joints will result, and the life of these u-joints will be shortened dramatically.

Danger: PTO Spline Adaptors

It is dangerous to use a PTO spline adaptor to change your tractor PTO shaft spline to accommodate a different implement PTO spline. Match the right tractor PTO spline and speed with the PTO driveshaft provided with the implement. *Use of a PTO spline adaptor will void the warranty on your implement PTO shaft and driveline.*

PTO Shaft Angles

PTO shafts are made to transmit power with angles at universal joints. However, these angles should be kept to a minimum, the larger the angle, the shorter the life of the PTO shaft. Take for example a snowblower made for a tractor capacity of 60-75 HP, which would be attached to a 60 HP tractor, operating at maximum capacity (60 HP continuous).

HP	PTO Angles	Estimated Life in Hours
60 @ 540 rpm	5°	450 hours
	10°	195 hours
	15°	90 hours
	20°	40 hours
	25°	20 hours

How to Determine PTO Angle

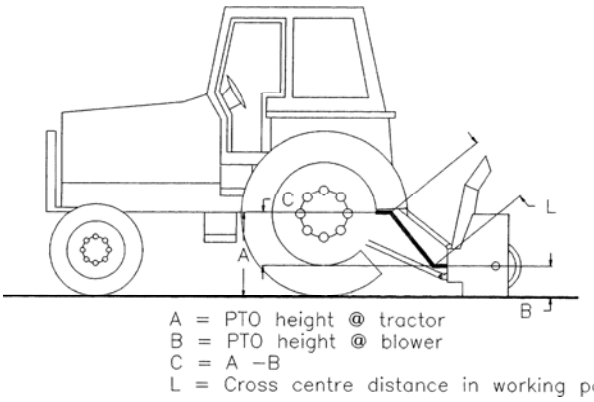

1) Lower blower on ground.
2) Take measurements A, B & L
3) Subtract B from A (A−B=C)
4) Divide L by C (L/C=F)
5) Compare F Factor in table below to find PTO angle (interpolate if necessary).

F FACTOR	ANGLE
6.00	10°
3.75	15°
2.75	20°
2.15	25°
1.75	30°

Start-Up

Previous examples clearly demonstrate that universal joint angle is directly related with the life of your PTO shaft and u-joints. In order to reduce angle, it is necessary to increase the distance between your snowblower and tractor.

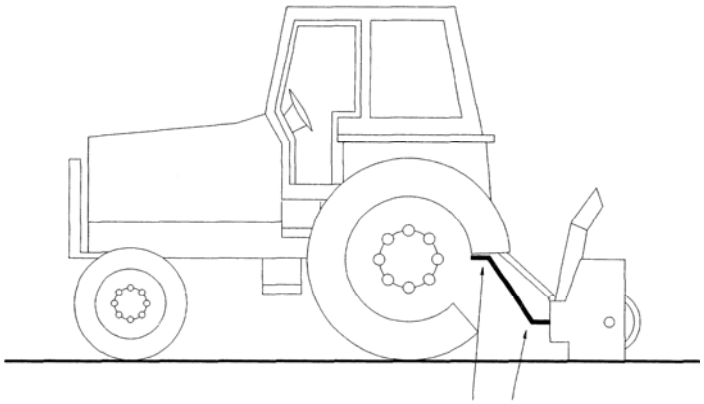

AVOID TOO LARGE ANGLES @ PTO JOINTS

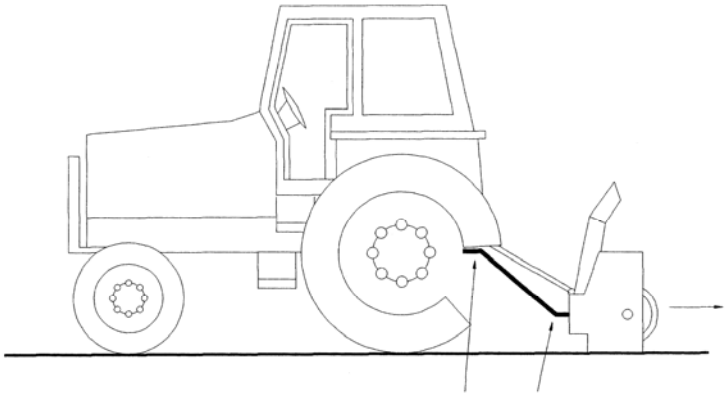

REASONABLE ANGLES @ PTO JOINTS

If it is impossible to increase the distance between snowblower and tractor, in order to maintain a reasonable angle at the PTO, it is recommended to use a larger PTO, that is, a greater capacity PTO (please refer to your dealer for more details).

Equal PTO Angles

A popular habit is to change the snowblower angle in order to obtain a better scraping effect. This practice can become harmful to the PTO. With the angle at each end being unequal there will be fan speed variations as well as drastic increase of load on cross-kit and bearings. To avoid these problems it is recommended to keep tractor PTO shaft and snowblower input shaft always parallel.

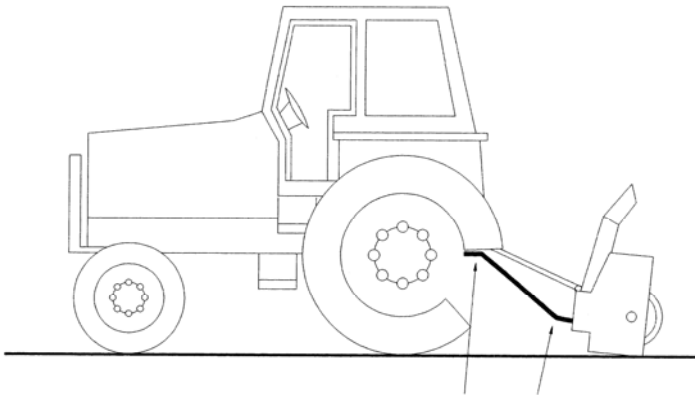

AVOID UNEQUAL ANGLES @ PTO JOINTS

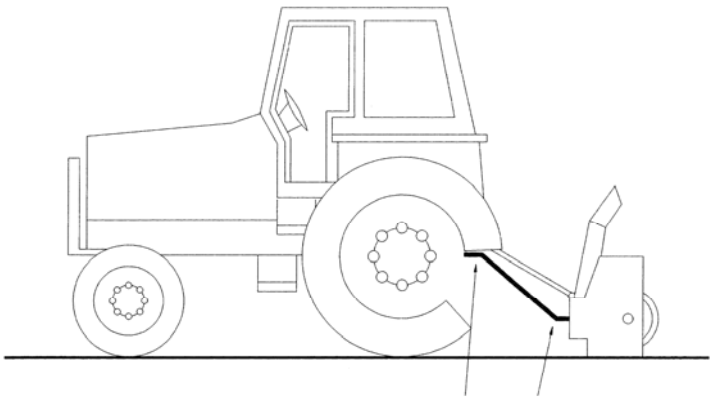

EQUAL ANGLES @ PTO JOINTS RECOMMENDED

Maximum Length of PTO Shaft

WARNING- Telescopic tubes of a PTO should be set to minimum length to meet ideal conditions for power transmission.

The following table could be used as a guide to find the maximum permissible length of PTO:

PTO Size	Overall Length		Telescopic Tube Overlap
	Closed	Opened Max.	
T20-056P	29 ¾”	41”	5”
T40-056P	30 ½”	40 ½”	6”
T50-071P	36 ½”	50”	7”
T60-071P	37 ¾”	51 ¼”	7”
T80-066P	36”	47 ¼”	7”
T80-076P	40 ½”	53”	8”
T90-071P	39”	51”	8”

Shear Bolts

Shear bolts are made to break under shock loading on the fan or on the auger. However, under certain circumstances, this security is not adequate. Example: A sudden high impact shock on the fan may, in some cases, break the fan shaft without breaking the shear bolt.

If the shear bolt breaks make sure to always replace it with a bolt of the same category

Shear Bolt Location	Grade
Cross shaft shear sprocket assembly	SAE Grade 5
PTO shaft	Metric Grade 8.8

It is necessary to always keep this bolt very tight, in order to maintain the efficiency of the shearing mechanism.

WARNING - The gearbox fan shafts are made with special alloy steel. Moreover, they are case hardened to increase capacity to shock load. These shafts cannot be broken under normal snow loads. However, undesirable objects may enter the fan and either bend or break the gearbox shaft. It is understood that a gearbox cannot be built to resist every possible overload, and consequently, gearbox fan shafts <u>will not be replaced under warranty.</u> Therefore, the operator of the snowblower must be very careful.

3. Maintenance

Before doing any adjustments or service, stop the unit, disengage the PTO drive and completely shut down the tractor engine with the snowblower set on the ground or completely unhooked from the tractor.

Installing New Chain

Before installing a new chain, carefully check the teeth on the sprocket. If the teeth are worn to a hooked shape, the sprockets should be replaced to ensure full capacity performance and a satisfactory life from the new chain. Proper tension is essential when installing new chain. Tight chain causes an additional load which increases wear on chain joints, sprockets and shaft bearings. Slack chain produces vibration, which may result in excessive chain wear, noise, or shock loading. Chain Tightener - Tighten chain allowing ¼" sag in the bottom span as the chain wears.

Sprocket Inspection

Check for these common sprocket problems which lead to replacement.

1. Wear on the sides, which is due to misalignment.
2. Tooth wear (indicated by hooking).
3. Broken teeth.
4. Cracks that might lead to failure.
5. Wobbling of sprockets on shaft.

Bearings – Grease (where applicable)

For the best results, the grease should be pumped into the bearings slowly until a very slight bead of grease forms around the bearing seals on the shaft. This bead, in addition to acting as an indication of adequate lubrication, provides extra protection against the entry of foreign matter. To prevent premature failure, always ensure the grease zerk, grease gun tip, and the grease is clean and free of any dirt, grit, paint or foreign matter.

Gearbox

In order to change the oil in the gearbox, it is necessary to tilt the machine so the oil will drain out of the gearbox. **Please be sure this is done safely!** The easiest method to do this is lifting the entire unit with a loader, ensure proper lifting devices are used.

PTO Drive Shaft

It is **important** that the owner/operator read this section and the information supplied by the PTO manufacturer. Be sure to pay attention to all warning and danger labels.

1. Safety Shields - These shields should be left in place at all times to prevent injury.
2. Shear Bolt - The PTO shaft used on current models uses a shear bolt to protect the tractor and blower from serious damage. The bolts used must be designed for this application or the bolt will not shear during an overload situation. USE ONLY METRIC GRADE 8.8 SHEAR BOLTS, available at your local dealer.
3. Do not wear loose clothing when operating the PTO or when near any rotating equipment.
4. To avoid injury, do not clean, adjust, unclog or service PTO driven equipment when tractor is running.
5. Never exceed the recommended operating speed for the particular equipment in use.
6. PTO shafts must only be used for their intended purpose and are designed for only that machine.
7. Slide the collar / push the locking pin and simultaneously push PTO drive shaft onto PTO shaft until the locking device engages. Ensure that the PTO shaft is securely connected before use.
8. The maximum joint angles must be observed or serious injury and damage could occur.
   a. Continuous Operation 25 deg.
   b. Short duration 45-50 deg.
   c. Non-rotating 80 deg.
9. Avoid contact between the PTO shaft and tractor or implement.
10. The safety chain is intended to prevent the shield from rotating against non-moving parts, preventing shield damage. A properly installed chain will increase the service life of the shield.
11. Chains must be fitted so as to allow sufficient rotation of the shaft in all positions. Be sure that chain does not become entangled with drawbar hitch or other restrictions during operation or transport.
12. The PTO drive shaft must not be suspended from the chain.

13. Using quality grease, pump grease in the grease zerks before starting work, and every 8 operating hours. Clean and grease the PTO drive shaft before each period of prolonged non-use. The PTO shield bell must be moved back as per the instructions below in order to properly grease the PTO universal joints. When the shield bell has been moved back, grease the bell housing locking collar as well. Telescoping members must have lubrication to operate successfully regardless of whether a grease fitting is provided. Those without fittings should be pulled apart and grease should be added manually. Check and grease the guard tubes in winter to prevent freezing.

Shield Bell Removal

Disconnect the chain from the PTO shield (make sure it is reconnected before installing on the machine)

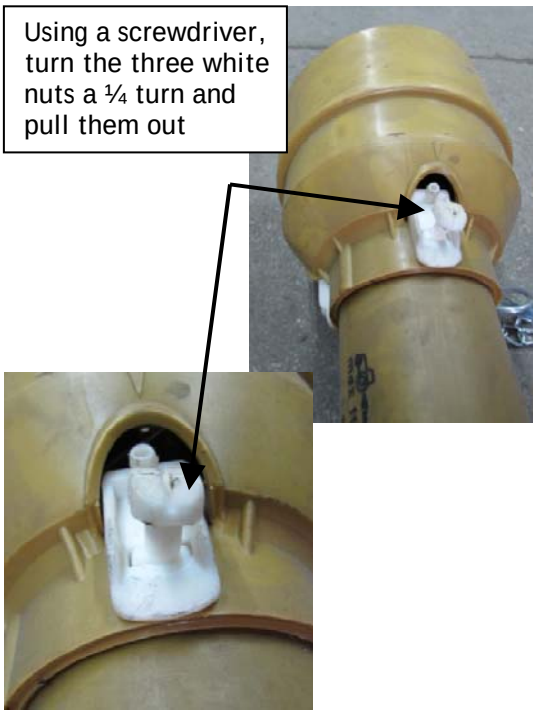

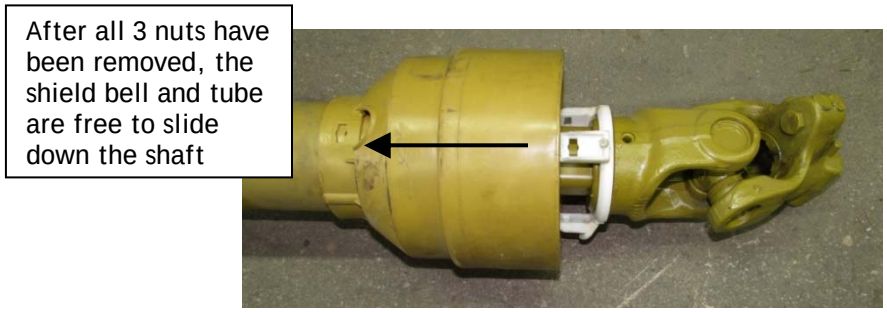

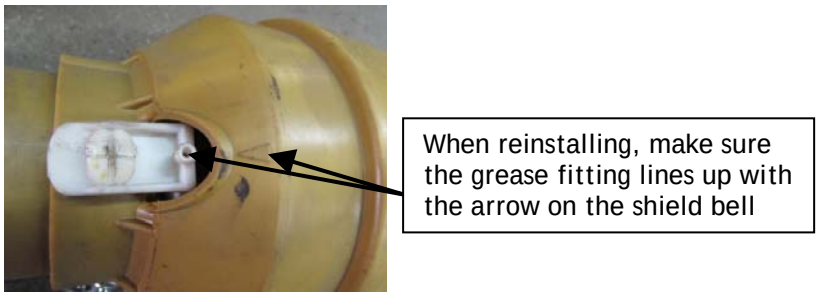

4. Maintenance & Lubrication Schedule

**** Before doing any adjustments or service, stop the unit, disengage the PTO drive and completely shut down the tractor engine with the snowblower set on the ground or completely unhooked from the tractor.**

The following items are to be checked, and if necessary, corrective action taken. This schedule is designed for units operating under normal conditions. If the unit is operating in adverse or severe conditions it may be necessary for the items to be checked and serviced more frequently.

CHECK AND INSPECT THE FOLLOWING EVERY:	8 HRS.	50 HRS.	100 HRS.
PTO Drive	X*		
Gearbox Oil Level		X	
Main Auger & Bearing Lubrication	X*		
Gearbox Drain & Refill			X†
Chain & Sprocket for Wear & Adjustment	X*		
Chute Lubrication on Stack	X		

* In severe conditions these items may require more frequent service
† Drain & refill after the 1st 100 hours

Off Season
During the off season, when the blower is not to be used for a prolonged period of time, it is recommended that the drive chain be well oiled. Or, remove the drive chain completely and store in a container with enough oil to cover the chain. As well, make sure all bearings are filled with grease (where applicable) and ensure the PTO is well greased.

Lubrication Specifications

Bearings Splined Drive Line Yokes Shear Bolt Yokes PTO Shaft	**NLGI #2 or #3 Lithium Base Grease**
Gearbox(s)	**40/50 or 80/90**
Drive Chain	**SAE-20 to SAE-30 Motor Oil**
Hydraulic Oil	**SAE-10 ISO 32 or Equivalent** **Indol #32** **Dextron #32**